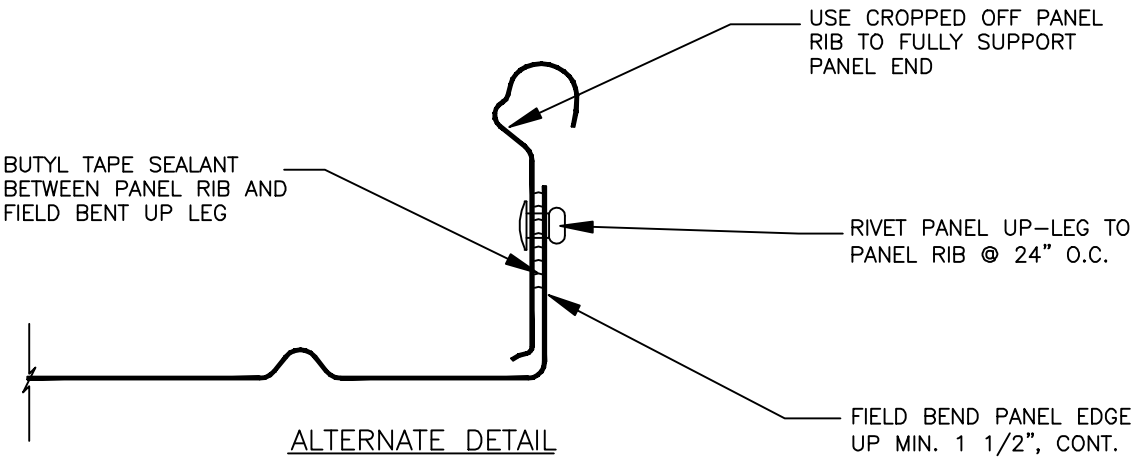

ALTERNATE DETAIL

PANEL ENDS/STARTS OFF MODULE

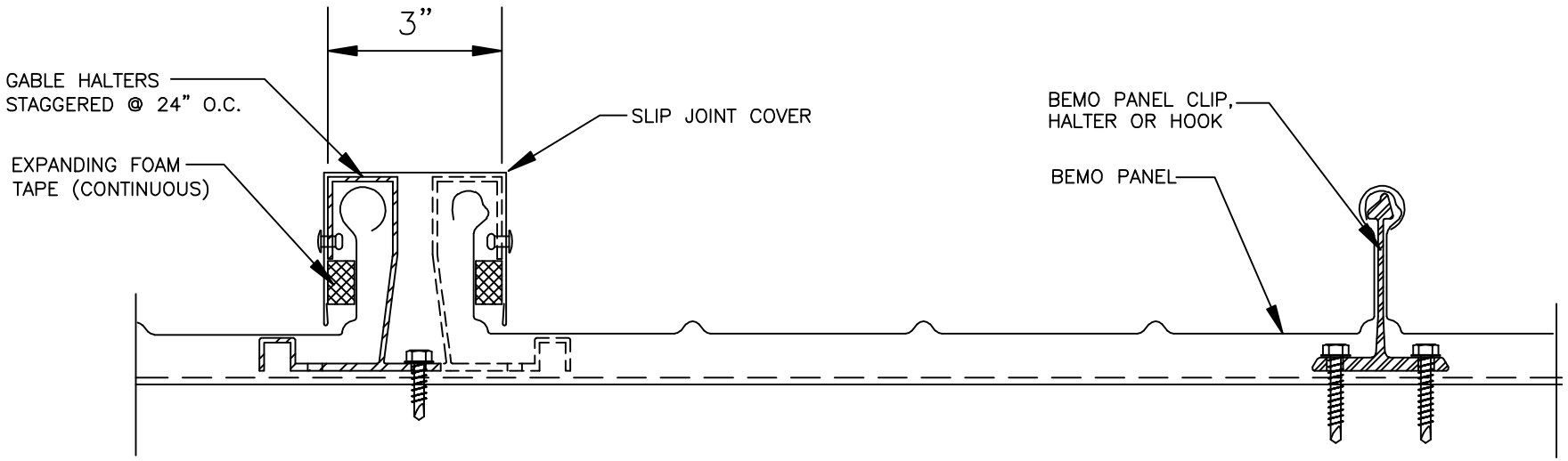

BEMO·USA
Xtreme Roofing Solutions
p: 1.800.926.2366
TAMPA, FLORIDA • PHOENIX, ARIZONA • PITTSBURGH, PENNSYLVANIA

PANEL: BEMO	DATE:
DETAIL: SLIP JOINT DETAIL	PAGE: 1 OF 1